Model: 9011 ARTESIAN TWIN FULL BUNK BED

SAFETY WARNINGS

1. Follow the information on the warnings appearing on the upper bunk end structure and on the carton. Do not remove warning label from bed
2. Always use the recommended size mattress or mattress support, or both, to help prevent the likelihood of entrapment or falls.
3. Surface of mattress must be at least 5 inches (127mm) below the upper adge of guardrails.
4. Do not allow children under 6 years of age to use the upper bunk
5. Prohibit more than one person on the upper bunk
6. Periodically, check and ensure that the guardrail, ladder, and other components are in their proper position, free from damage, and that all connectors are tight
7. Do not allow horseplay on or under the bed and prohibit jumping on the bed
8. Always use the ladder for entering and leaving the upper bunk.
9. Do not use substitute parts. Contact the manufacturer or dealer for replacement parts.
10. Use of a nightlight may provide added safety precaution for a child using the upper bunk.
11. Always use guardrail on both long sides of the upper bunk. If bunk bed will be placed next to the wall, the guardrail that runs the full length of the bed should be place against the wall to prevent entrapment between the bed and wall.
12. The use of water or sleep flotation mattresses is prohibited.
13. Keep these instruction for future reference.

STRANGULATION HAZARD

Never attach or hang items to any part of the bunk bed that are not designed for use with the bed; for example, but not limited to, hooks, belts and jump ropes.

SIZE OF MATTRESS AND FOUNDATION

Use only mattress which is 74" - 75" long and 37 1/2" - 38 1/2" wide on twin upper bunk
Use only mattress which is 74" - 75" long and 52 1/2" - 53 1/2" wide on full lower bunk
Ensure thickness of mattress and foundation combined does not exceed 8" and mattress and is at least 5" below upper edge of guardrails.

Replacement parts, maybe obtained from any Donco dealer or directly from us at the below address.

6801 Snowden Road Fort
Worth, Texas 76140

PARTS LIST: 9011
ARTESIAN TWIN FULL BUNK BED

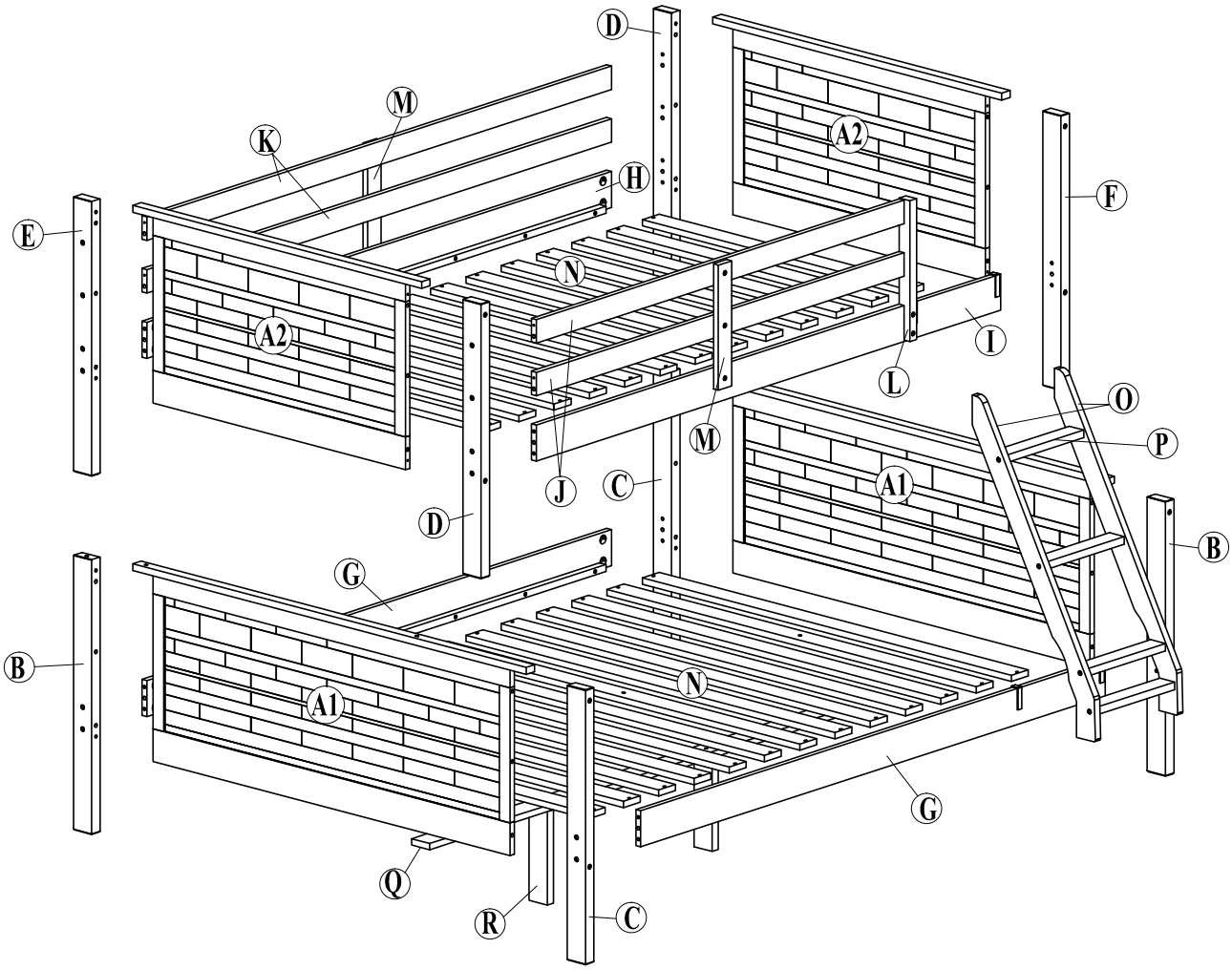

HARDWARE PACK #: 9011 - ARTESIAN TWIN FULL BUNK BED

CODE	DESCRIPTION		DIMENSION	QTY
1	DOWEL		Ø10 x 40mm	40 pcs
2	DOWEL		Ø10 x 30mm	8 pcs
3	BOLT		(Ø13) 1/4" x 65mm	16 pcs
4	HALF MOON NUTS		21 x 12 x 9mm	16 pcs
5	BOLT		(Ø13) 1/4" x 120mm	16 pcs
6	BOLT		(Ø13) 1/4" x 60mm	16 pcs
7	BOLT		(Ø13) 1/4" x 32mm	8 pcs
8	METAL PIN		Ø10 x 90mm	4 pcs
9	HOOKS		60 x 25 x 18mm	4 pcs
10	SCREW		Ø3.5 x 15mm	12 pcs
11	SCREW		Ø4 x 30mm	55 pcs
12	ALLEN WRENCH		(1/4")4.5 x 58mm	1 pc
13	FOAM STICK		90 x 17 x 2mm	4 pcs
14	BOLT		(Ø13) 1/4" x 40mm	2 pcs

PARTS LIST: 9011
ARTESIAN TWIN FULL BUNK BED

STEP 1

1		12 pcs
5		8 pcs

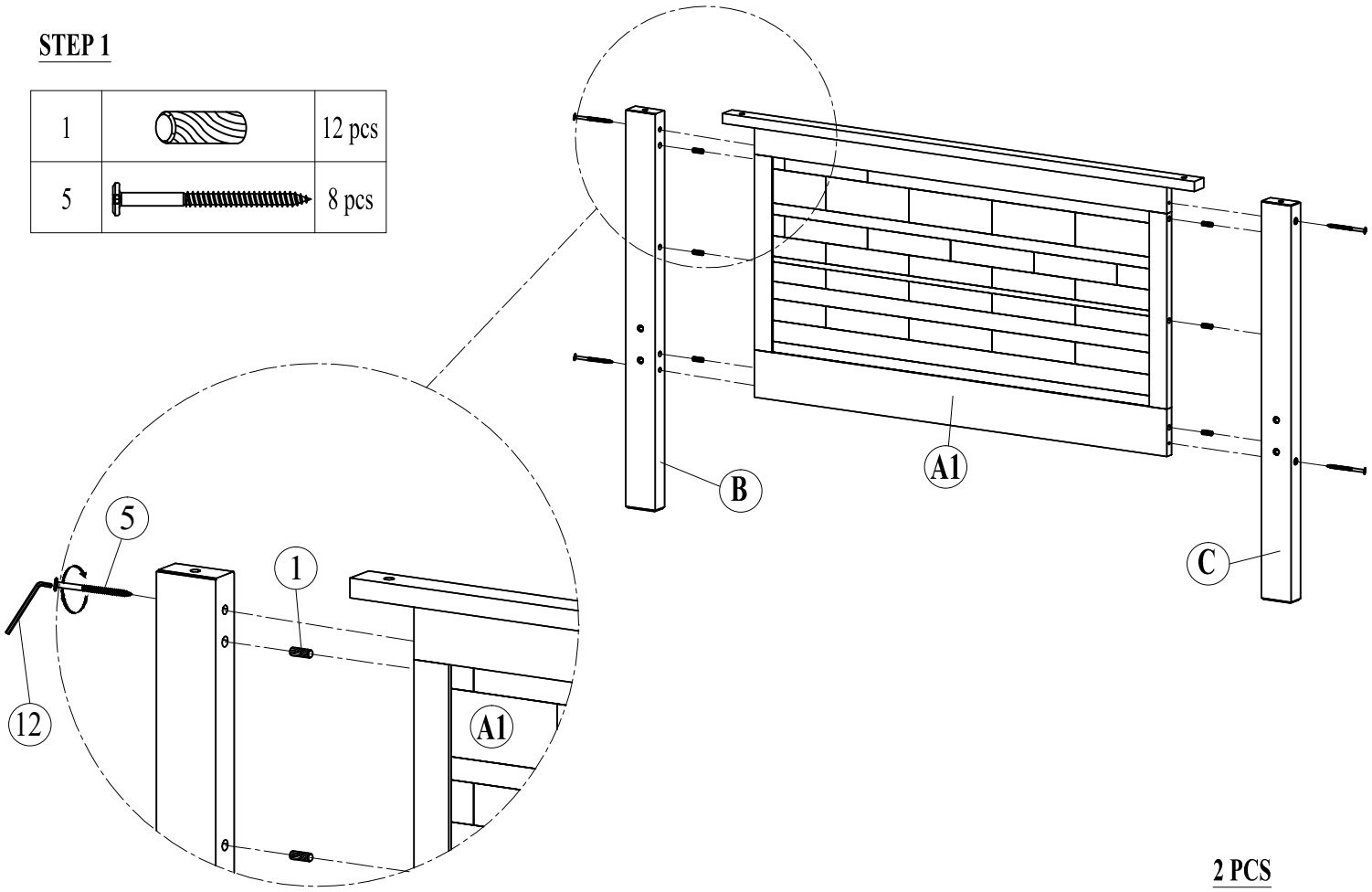

2 PCS

STEP 2

1		4 pcs
3		8 pcs
4		8 pcs

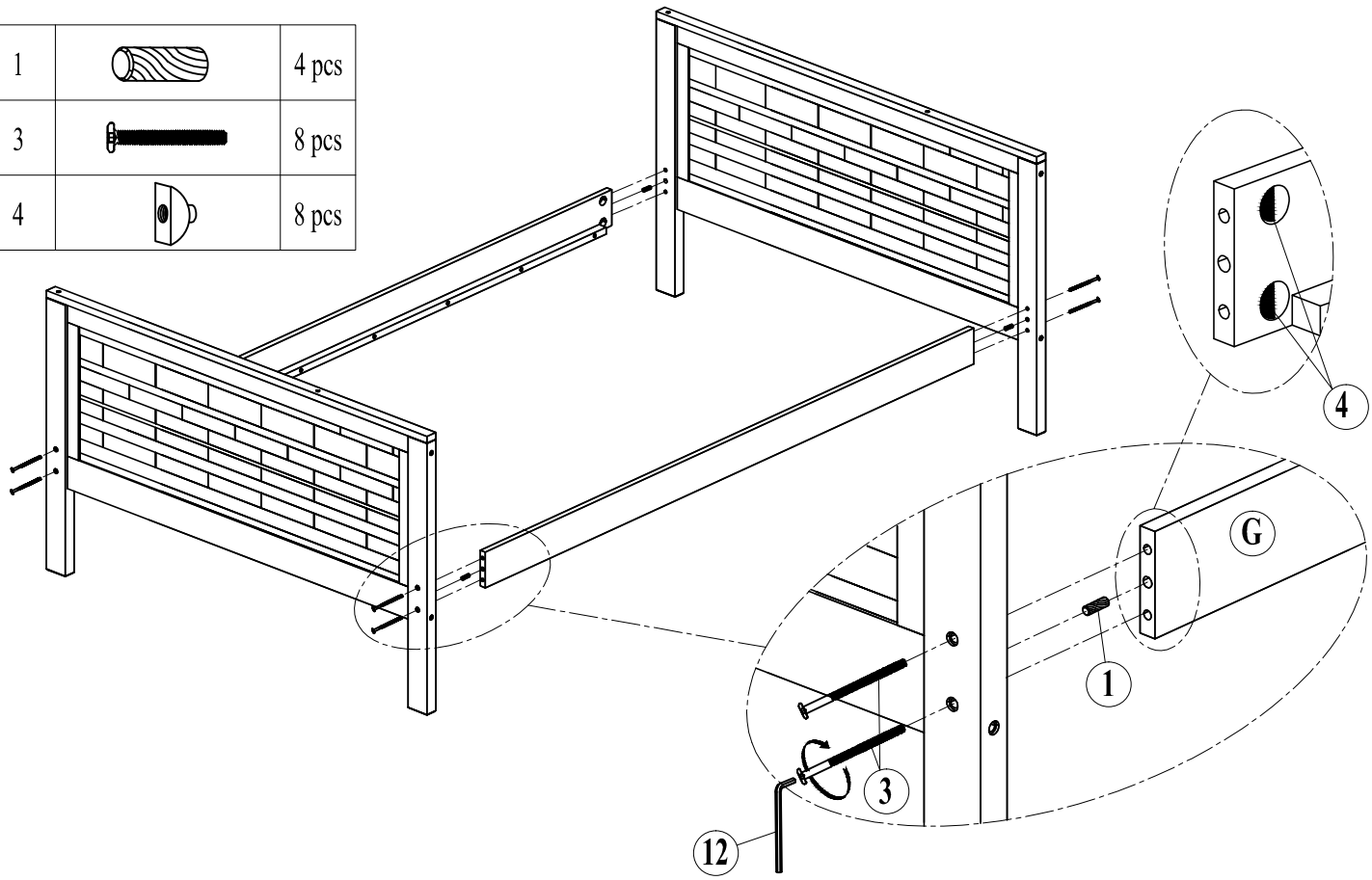

PARTS LIST: 9011
ARTESIAN TWIN FULL BUNK BED

STEP 3

5		26 pcs

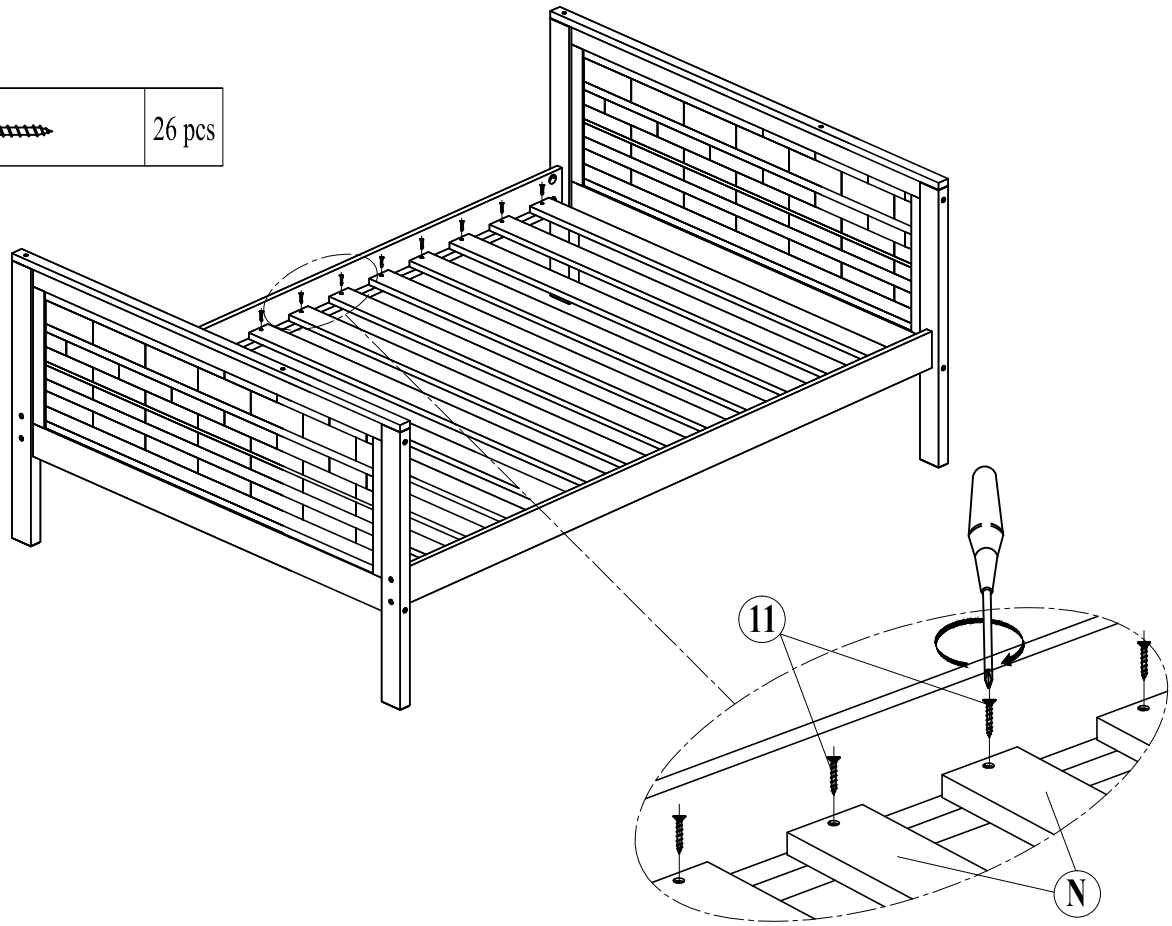

STEP 4

14		2 pcs
11		3 pcs

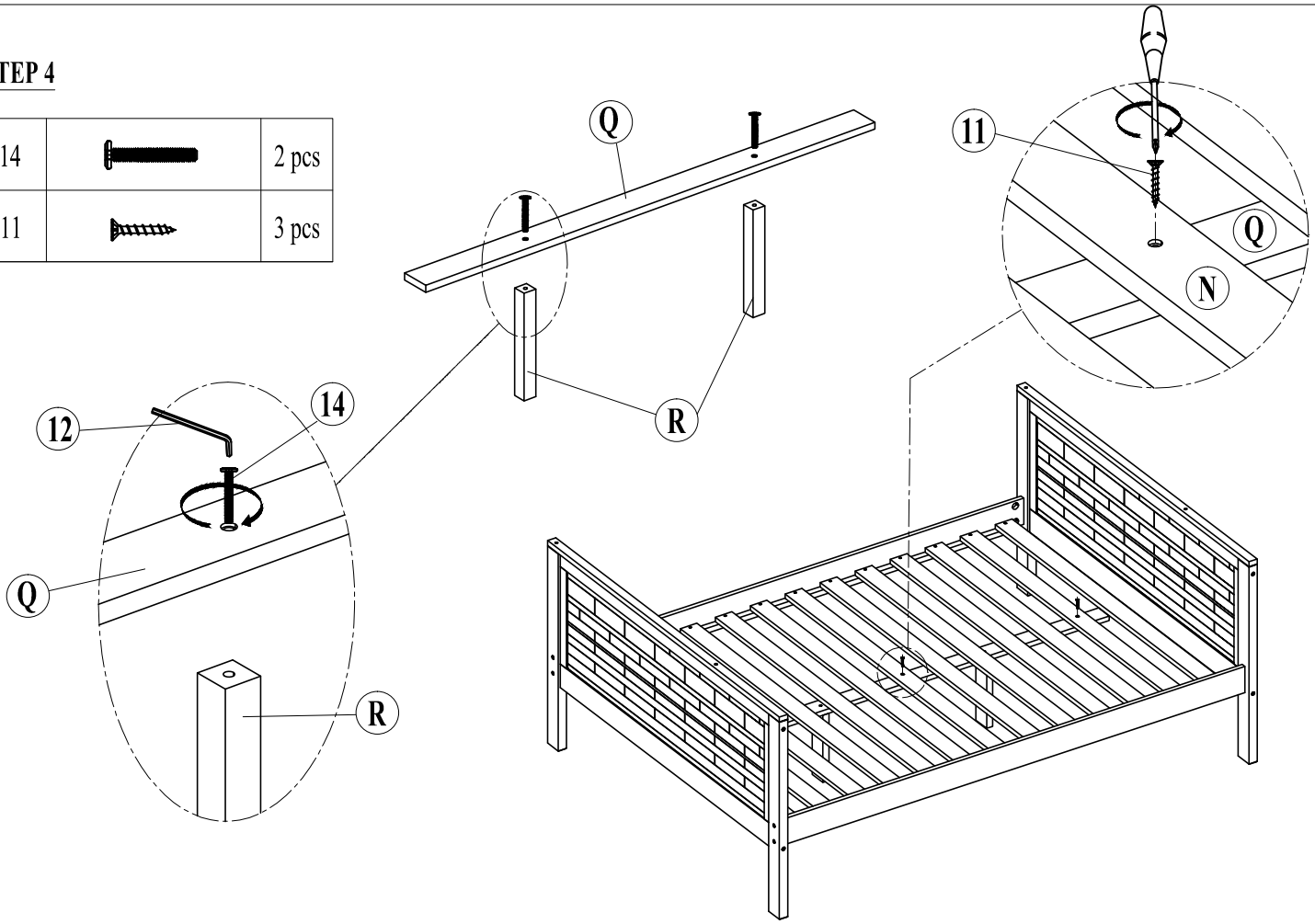

PARTS LIST: 9011
ARTESIAN TWIN FULL BUNK BED

STEP 5

1		6 pcs
5		4 pcs

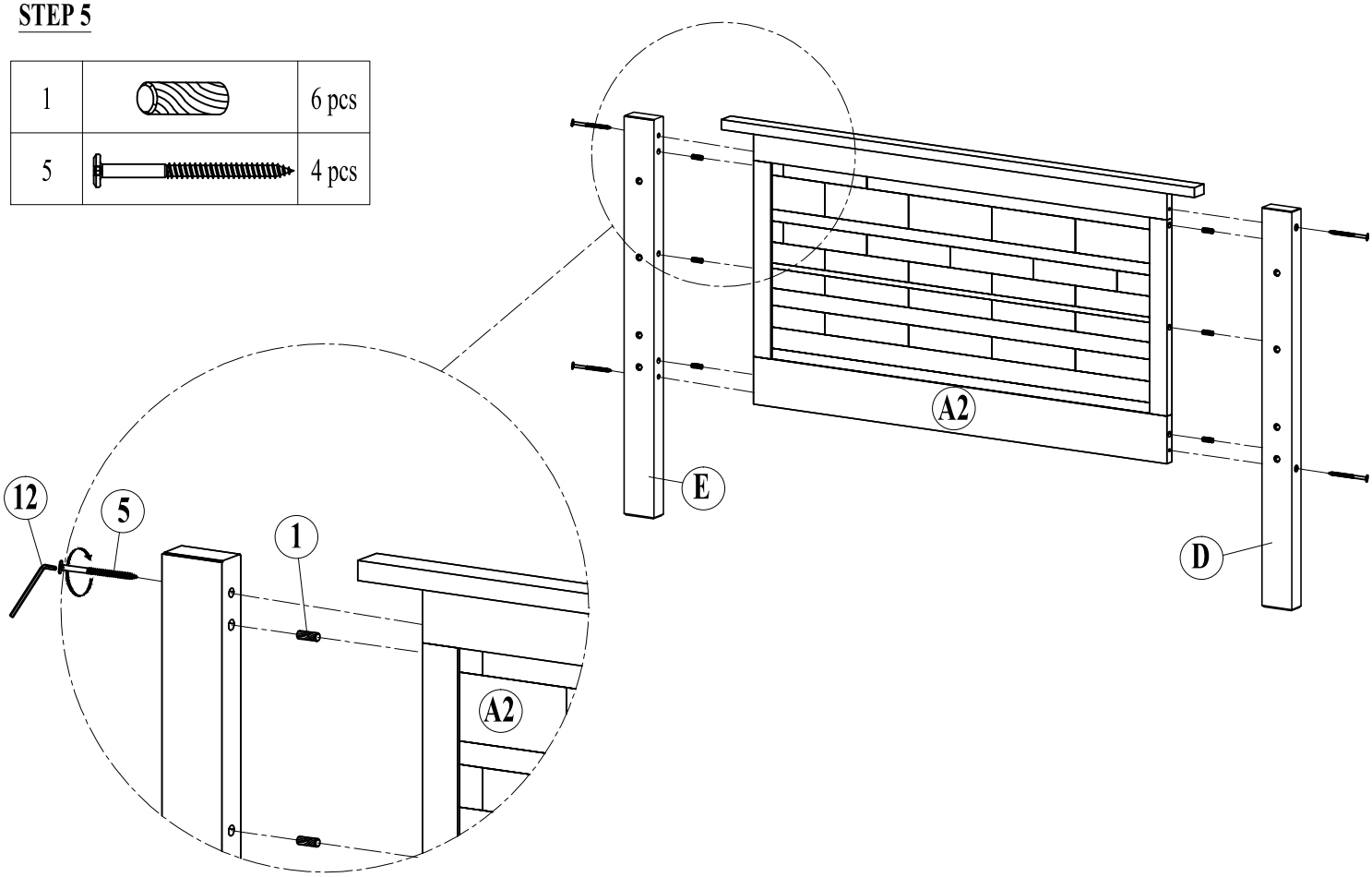

STEP 6

1		6 pcs
5		4 pcs

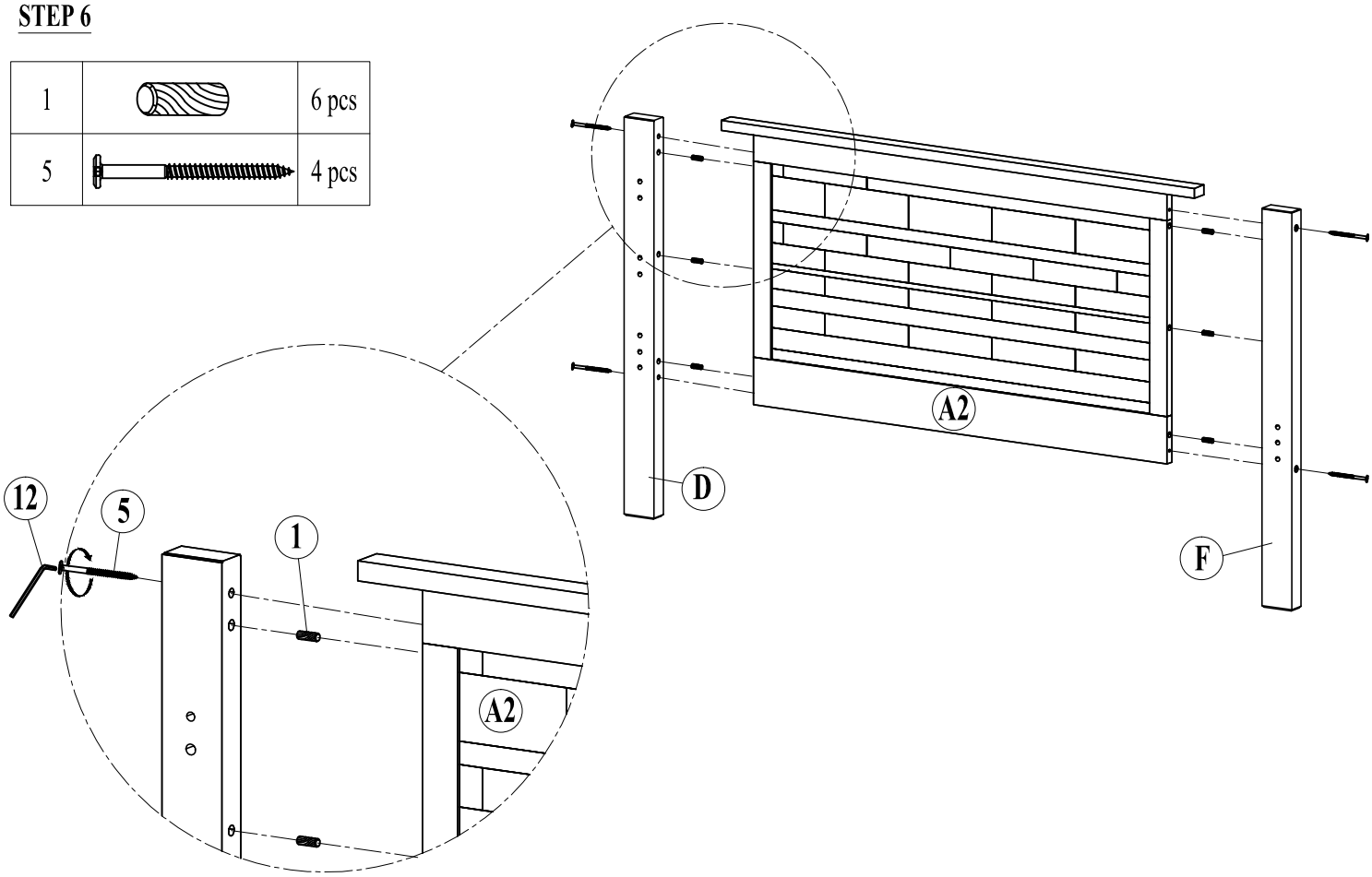

PARTS LIST: 9011
ARTESIAN TWIN FULL BUNK BED

STEP 7

1		6 pcs
3		4 pcs
4		4 pcs
6		4 pcs
7		3 pcs

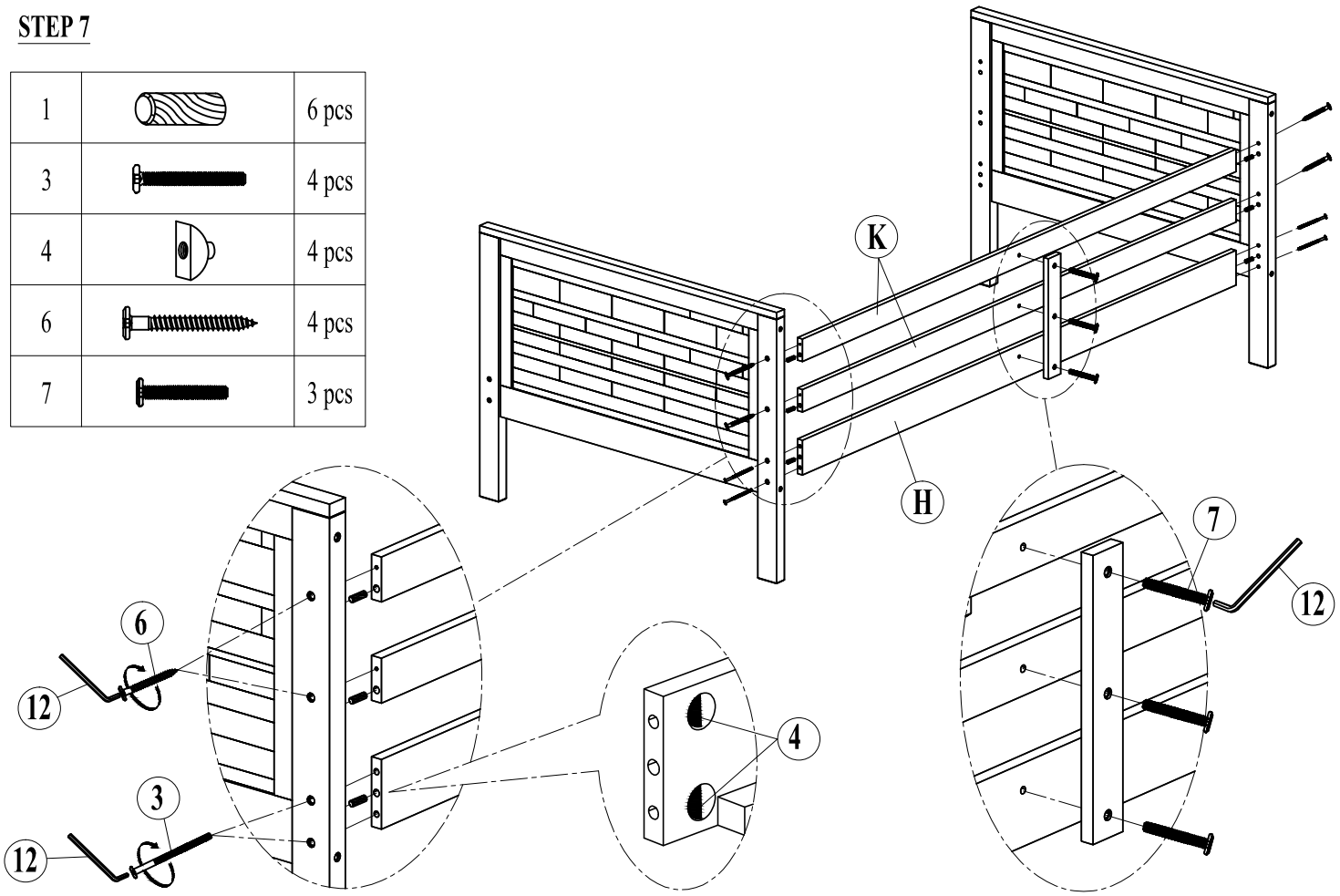

STEP 8

1		6 pcs
3		4 pcs
4		4 pcs
6		4 pcs
7		5 pcs

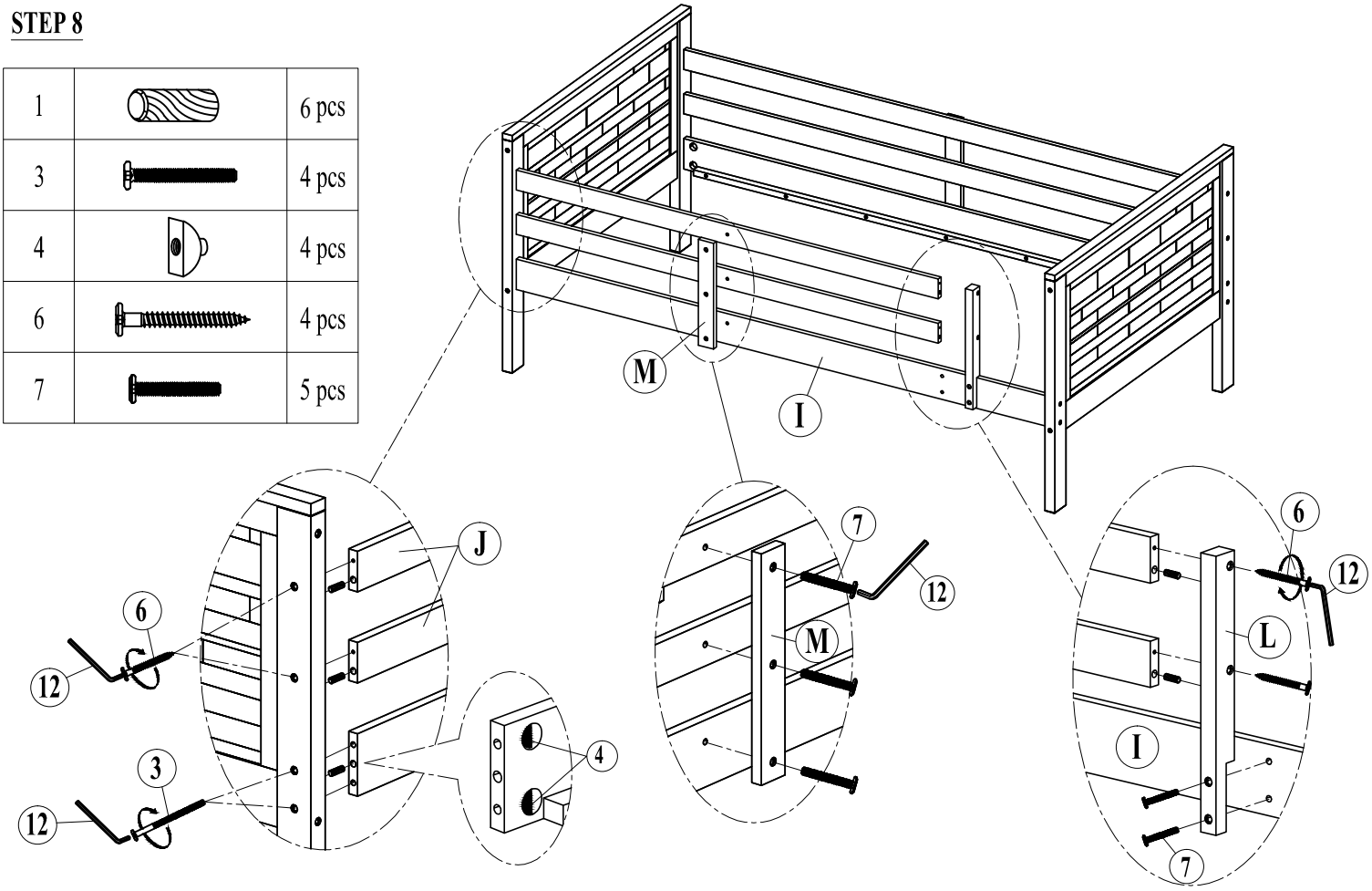

PARTS LIST: 9011
ARTESIAN TWIN FULL BUNK BED

STEP 9

5		26 pcs

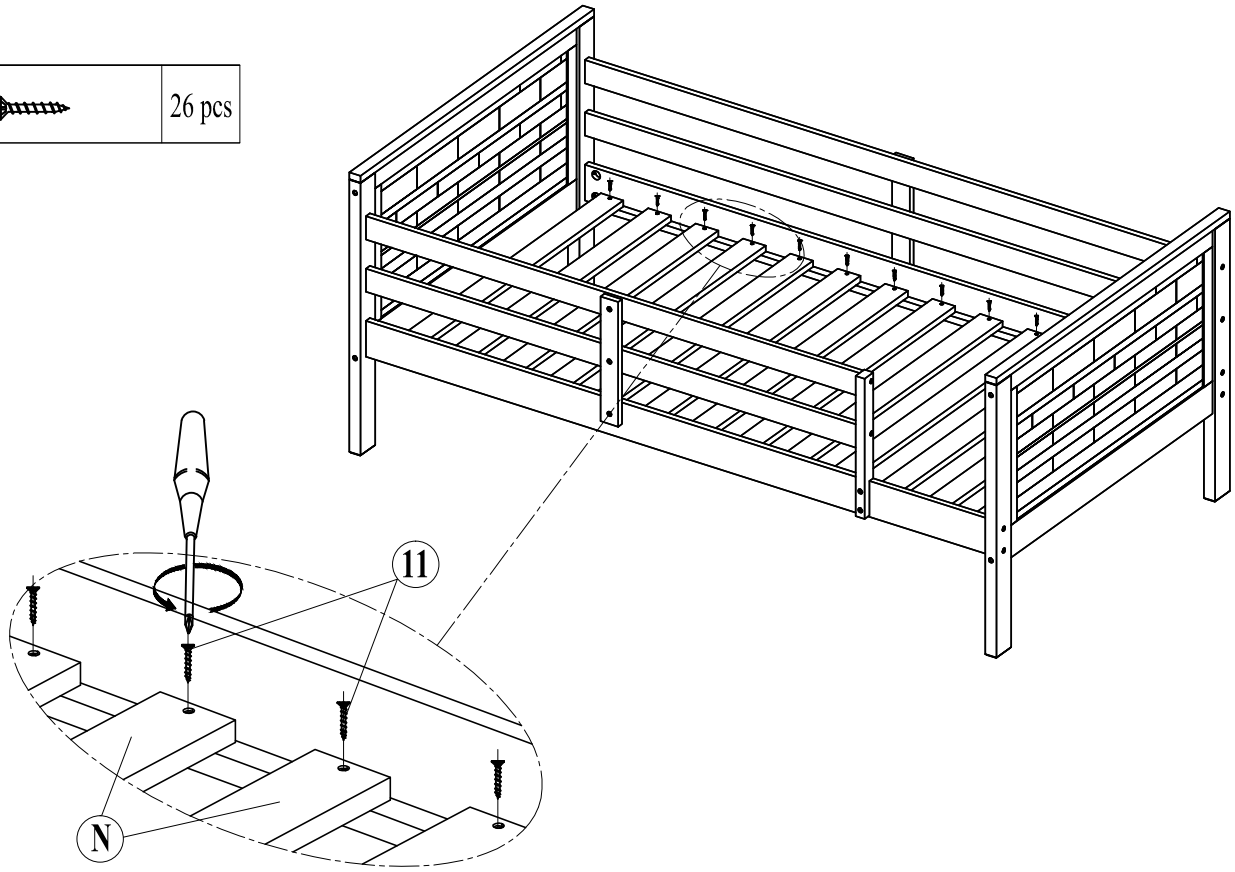

STEP 10

8		4 pcs

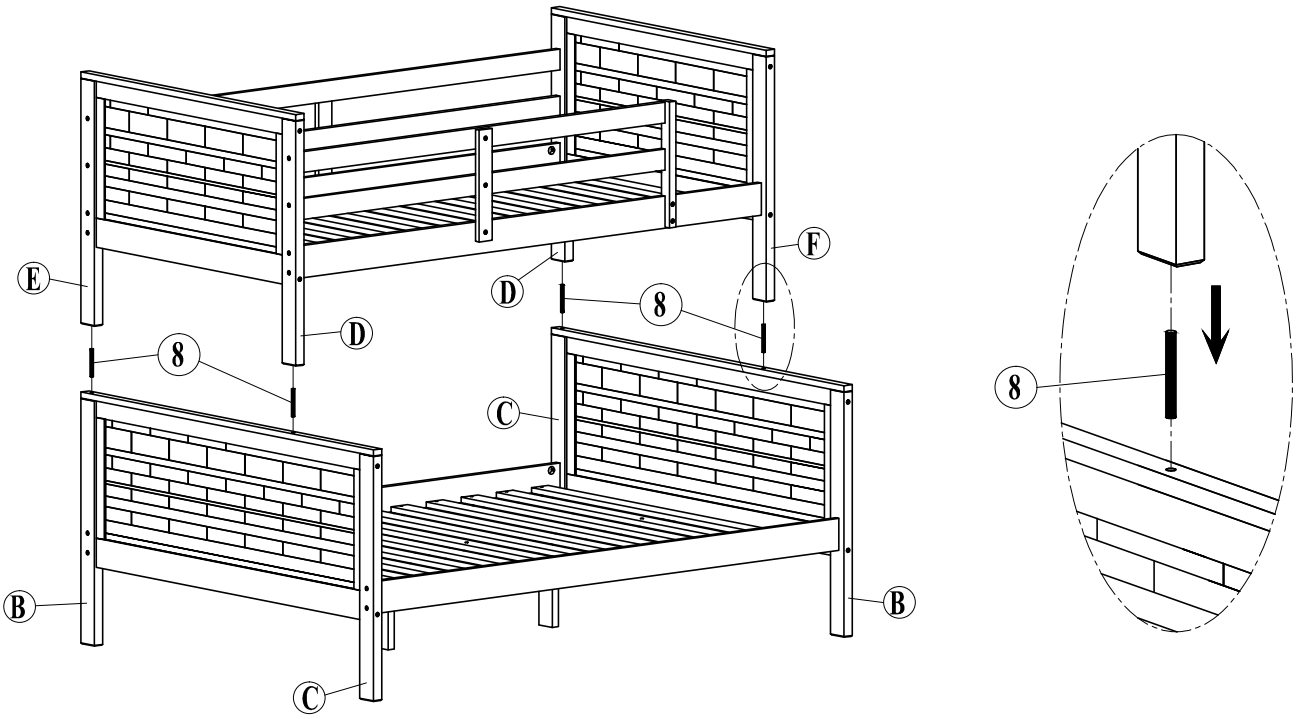

PARTS LIST: 9011
ARTESIAN TWIN FULL BUNK BED

STEP 11

9		4 pcs
10		6 pcs
13		4 pcs
2		8 pcs
6		2 pcs

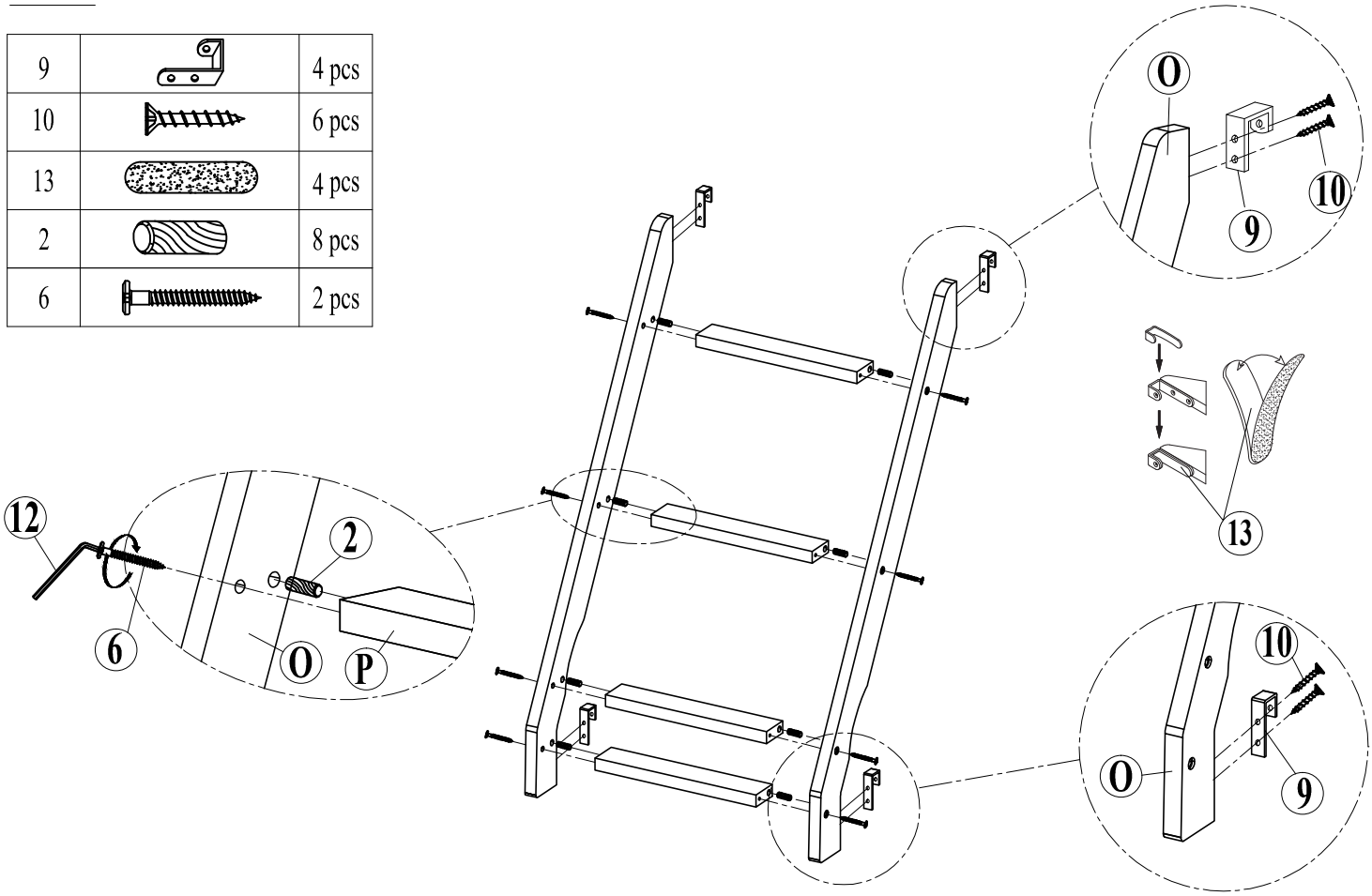

STEP 12
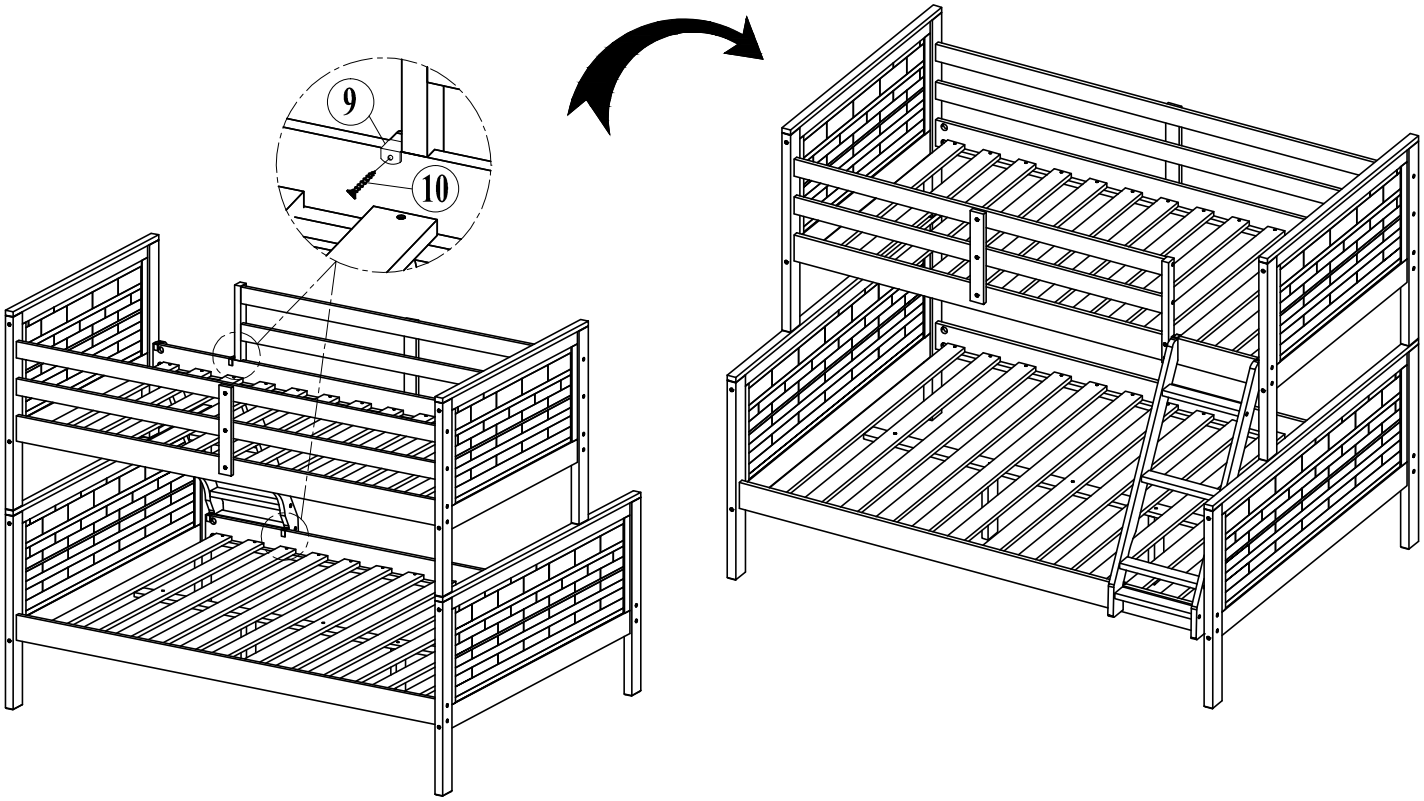
10		4 pcs